YGROS **EDF**

PATENTED

The latest sanitary SPRINGLESS check valve.
Fully hygienic design.
Suitable for horizontal, vertical up and down installation.

YGROS VALVES

YGROS VALVES

YGROS technology sets new standards in the world of plant design, thanks to a patented magnetic principle replacing the conventional spring in Non Return Valves

For fluids and steam. Suitable for horizontal and vertical applications.
Up to 220°C. A really smart solution for your clean applications.

- No more springs that can break or misfire
- No flow obstructing components
- No media entrapment
- No stagnation point

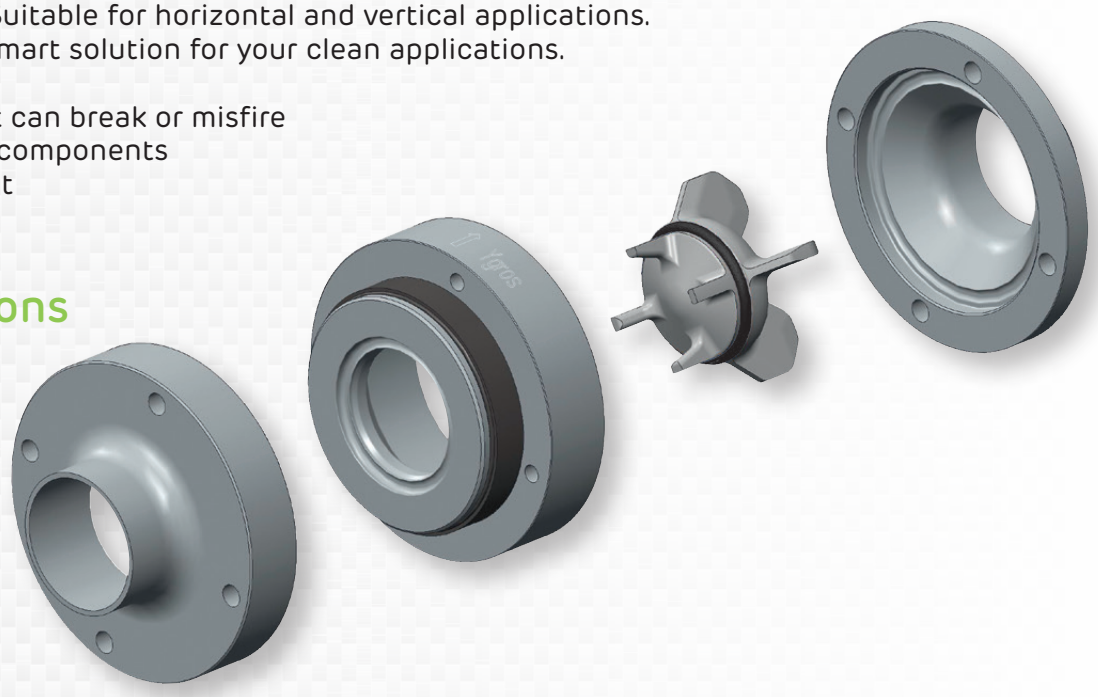

Main applications

- Biotechnology
- Pharmaceutical
- Chemical Industry
- Dairy
- Food
- Cosmetic
- Beverage

Benefits at a glance

Maximum Hygiene (Springless design):
only the shutter comes into contact with the product.
There are no springs, discs or other components, which means no contamination and no stagnation point

Safe closing:
provided by integral magnets

Any installation position possible:
unlike other springless check valves, YGROS EDF can be installed in the horizontal, vertical up and down positions

Energy saving:
the innovative working principle and design allow for a smooth flow, minimising pressure drop

Laminar flow:
no turbulence

Maintenance free

Longer valve life

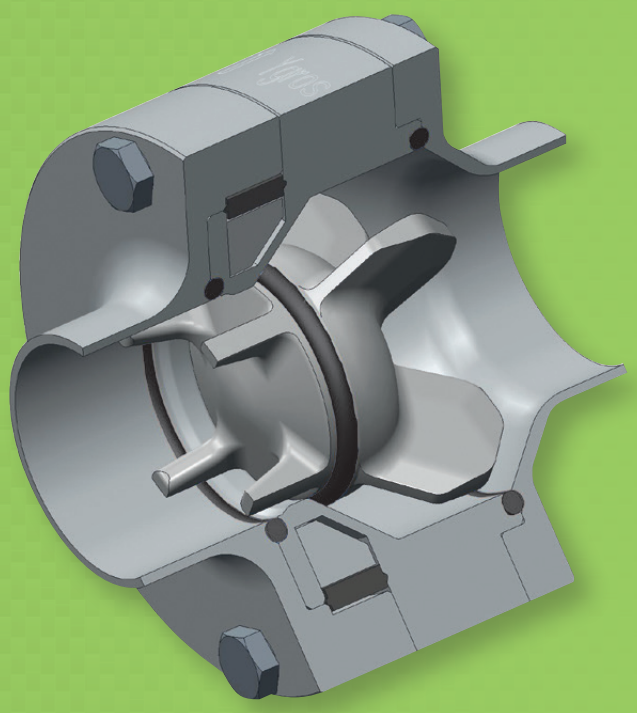

Springless check valves. Magnetic Technology

The main operational difference between a spring loaded check valve and the innovative YGROS EDF valve is the resistance to flow.

An ordinary check valve in the open position imposes significant resistance, because the compressed spring pushes the shutter against the flow with considerable force.

How The YGROS Principle Works

The magnets built into the valve body keep the shutter in a closed position.
The YGROS check valve opens when the inflow pressure exceeds the magnetic force.

In the open position the shutter moves away from the magnet, which means lower attraction to the seat and therefore lower resistance to flow, so pressure drop is minimal.
When the forward flow in the pipe stops, the magnet will attract the shutter back to its seat, stopping any backwards flow.

Technical data

Product contact materials	Body & Flanges: Stainless steel 1.4404 (AISI 316L) Shutter: 1.4462 (Duplex)
Non product contact materials	Magnet: Neodymium
Seal material options	NBR, EPDM, Silicone, FPM (Viton) FEP (PTFE)
Surface finishes	Internal: Ra<0,8 (standard) ,up to Ra<0.4 electropolished and passivated (optional) External: Ra<3,2 (standard) up to Ra<0.4 electropolished and passivated (optional)
End connection options	WELDING (DIN 1150 / DIN 11851 / ASME BPE / ISO 1127 / SMS) TRI-CLAMP (ASME-BPE / ISO 1127-2852 / SMS-2852 / DIN 32676-A) THREADED (Female DIN / Male Gas BSP 60° / Female Gas
Temperature range	-40°C/+150°C (Standard). Up to +220°C (optional)
Operating pressure	PN16 (standard). Further operating pressures on request
Media	Liquid, gas, steam
Certifications (on request)	Material (EN10204-3.1) / Seals (FDA) / Surface roughness ATEX PED

All product contact materials and seals are fully traceable

YGROS EDF standard opening pressures

Table applies
to water at 20° C (68°F)

Once opened, the required pressure to keep the shutter fully open is about 10 mbar.

Installation	Flow Direction	Opening pressure
HORIZONTAL lines		30 mbar
VERTICAL lines	Top to bottom	27 mbar
VERTICAL lines	Bottom to top	33 mbar

Alternative opening pressure options are available on request

Pressure drop chart

Graph reading applies to water at 20° C (68°F) installed in horizontal pipes

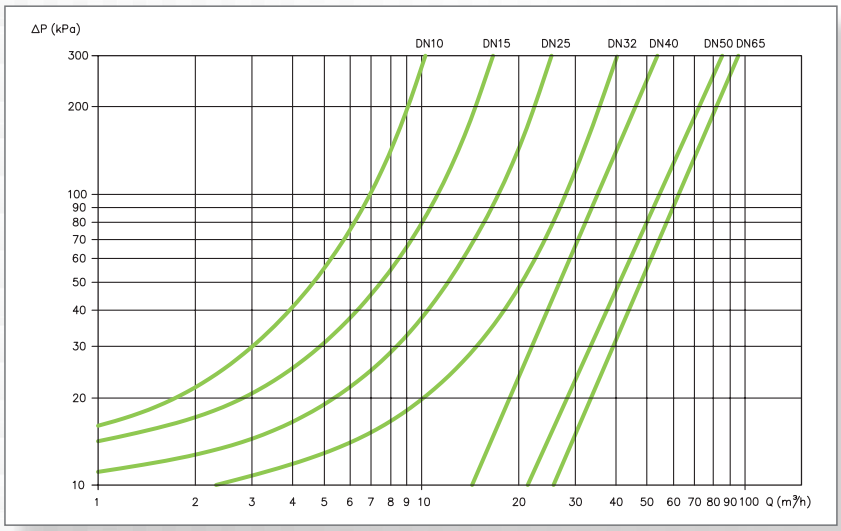

Ordering information

Max pressure
16 = PN 16

Shutter
0 = Standard Duplex
2 = Standard PTFE
3 = Ring form Duplex

External Finishing
R = Ra≤3,2 (Standard)
M = Ra≤0,8 (Standard)
A = Ra≤0,8 electropolished
F = Ra≤0,4
E = Ra≤0,4 electropolished
B = Ra≤0,4 electr. + passiv.
P = Passivated

Valve Body / Flanges Material
1 = AISI 316L (Standard)
0 = AISI 304

Internal Finishing
M = Ra≤0,8 (Standard)
A = Ra≤0,8 electropolished
F = Ra≤0,4
E = Ra≤0,4 electropolished
B = Ra≤0,4 electr. + passiv.
P = Passivated

Seals
N = NBR (Standard)
E = EPDM
V = VITON
S = SILICON
F = FEP

E 1 0040 S S 16 1 0 M M N 1

Form
E = EDF

Version
1 = Standard
4 = ATEX
5 = PTFE
6 = Eccentric

Dimension
DN = 0010...0100...
Inch = 01-2...01-0...21-2...

Inlet connection
D = FEMALE DIN
R = WELDING ENDS DIN 11850
S = WELDING ENDS DIN 11851
C = Tri-Clamp ASME BPE ENDS
T = WELDING ASME BPE ENDS
I = Tri-Clamp ISO1127
Y = WELDING ISO 1127 ENDS
M = Tri-Clamp SMS
N = WELDING SMS ENDS
B = MALE GAS BSP
F = FEMALE GAS BSP
A = Tri-clamp DIN 32676

Outlet connection
D = FEMALE DIN
R = WELDING ENDS DIN 11850
S = WELDING ENDS DIN 11851
C = Tri-Clamp ASME BPE ENDS
T = WELDING ASME BPE ENDS
I = Tri-Clamp ISO1127
Y = WELDING ISO 1127 ENDS
M = Tri-Clamp SMS
N = WELDING SMS ENDS
B = MALE GAS BSP
F = FEMALE GAS BSP
A = Tri-clamp DIN 32676

Max Temperature
1 = 150°C (Standard)
2 = 180°C
3 = 220°C

Custom materials, finishings and further modifications are available on request

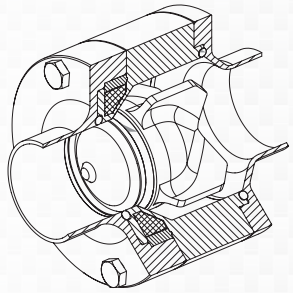

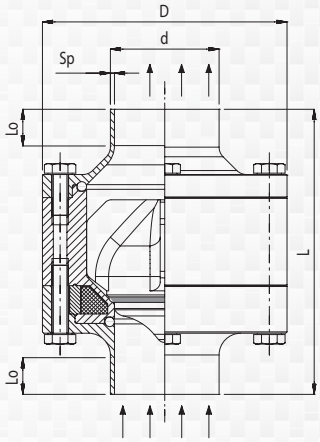

> Welding ends DIN 11850 - R

Dimensions	DN10	DN15	DN20	DN25	DN32	DN40	DN50	DN65	DN80	DN100
L	51	60	72	72	88	88	98	118	140	150
D	41	54	72	72	90	90	105	130	150	170
d	13	19	23	29	35	41	53	70	85	105
Sp	1,5	1,5	1,5	1,5	1,5	1,5	1,5	2	2	2,5
Lo	6	6	9	9	10	10	10	10	8	10
Weight (kg)	0,3	0,6	0,8	1,3	1,8	2,3	3,3	6,3	9,5	12,1

> Welding ends DIN 11851 - S

Dimensions	DN10	DN15	DN20	DN25	DN32	DN40	DN50	DN65	DN80	DN100
L	51	60	72	72	88	88	98	118	140	150
D	41	54	72	72	90	90	105	130	150	170
d	12	18	22	28	34	40	52	70	85	105
Sp	1,5	1,5	1,5	1,5	1,5	1,5	1,5	2	2	2,5
Lo	6	6	9	9	10	10	10	10	8	10
Weight (kg)	0,3	0,6	0,8	1,3	1,8	2,3	3,3	6,3	9,5	12,1

> Welding ends ASME-BPE - T

Dimensions	1/2"	3/4"	1"	1-1/2"	2"	2-1/2"	3"	4"
L	51	60	72	88	98	118	140	150
D	41	54	72	90	105	130	150	170
d	12,7	19,05	25,4	38,1	50,8	63,5	76,2	101,6
Sp	1,65	1,65	1,65	1,65	1,65	1,65	1,65	2,11
Lo	6	6	9	10	10	10	8	8
Weight (kg)	0,3	0,6	1,3	2,3	3,3	6,3	9,4	11,9

> Welding ends ISO 1127 - Y

Dimensions	DN8	DN10	DN15	DN20	DN25	DN32	DN40	DN50	DN65	DN80	DN100
L	51	60	60	72	88	88	98	118	140	140	150
D	41	54	54	72	90	90	105	130	150	150	170
d	13,5	17,2	21,3	26,9	33,7	42,4	48,3	60,3	76,1	88,9	114
Sp	1,6	1,6	1,6	1,6	2	2	2	2	2	2,3	2,3
Lo	6	6	6	10	10	10	10	10	10	8	13,5
Weight (kg)	0,3	0,6	0,8	1,3	1,8	2,3	3,3	6,3	9,5	12,1	12,56

> Welding ends SMS - N

Dimensions	DN25	DN38	DN51	DN63,5	DN76	DN104
L	72	88	98	118	140	150
D	72	90	105	130	150	170
d	25	38	51	63,5	76	101,6
Sp	1,2	1,2	1,2	1,6	1,6	2
Lo	10	10	10	10	8	10
Weight (kg)	1,3	2,3	3,3	6,3	9,3	11,8

We reserve the right to change specifications at any time without prior notice

> TRI-CLAMP ENDS

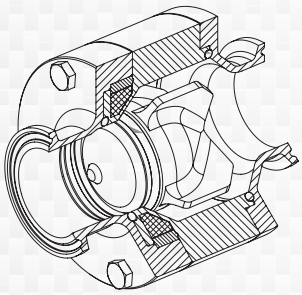

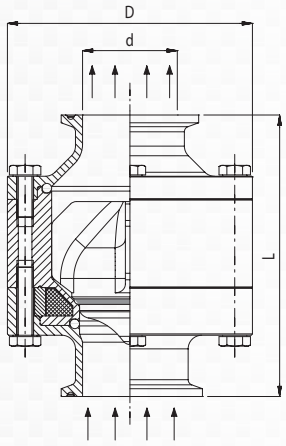

> Tri-Clamp ASME-BPE ENDS - C

Dimensions	1/2"	3/4"	1"	1-1/2"	2"	2-1/2"	3"	4"
L	61	70	77	88	98	118	145	155
D	41	54	72	90	105	130	153	173
d	9,4	15,7	22,1	34,8	47,5	60,2	72,9	97,38
Weight (kg)	0,3	0,6	1,4	2,3	3,3	6,3	9,5	12,2

> Tri-Clamp ISO1127 ENDS seal 2852 - I

Dimensions	DN8	DN10	DN15	DN20	DN25	DN32	DN40	DN50	DN65
L	51	64	64	77	88	88	98	130	135
D	41	54	54	72	90	90	105	130	130
d	10,3	14	18,1	23,7	29,7	38,4	44,3	56,3	72,1
Weight (kg)	0,3	0,6	0,8	1,4	1,8	2,3	3,3	6,3	9,5

> Tri-Clamp SMS ENDS seal 2852 - M

Dimensions	DN25	DN38	DN51	DN63,5	DN76	DN104
L	77	88	98	118	140	150
D	72	90	105	130	150	170
d	22,5	35,5	48,5	60,5	72,8	100
Weight (kg)	1,4	2,4	3,4	6,4	9,5	12,2

> Tri-Clamp DIN 32676 - A

Dimensions	DN 10	DN 15	DN 25	DN 40	DN 50	DN 65	DN 80	DN 100
L	61	70	77	88	98	118	145	155
D	41	54	72	90	105	130	153	173
d	10	16	26	38	50	66	81	100
Weight (kg)	0,3	0,6	1,4	2,3	3,3	6,3	9,5	12,2

We reserve the right to change specifications at any time without prior notice

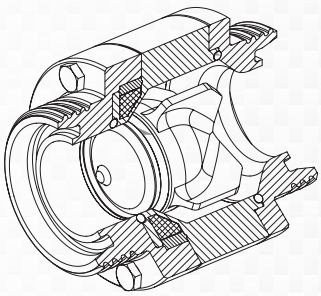

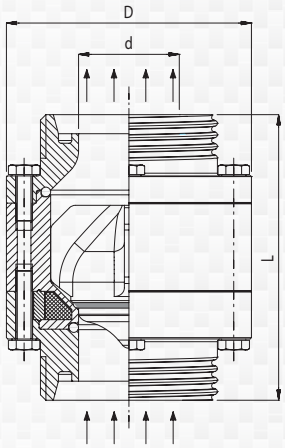

> Female DIN ENDS - D

Dimensions	1/2"	3/4"	1"	1-1/2"	2"	2-1/2"	3"	4"
L	61	70	77	88	98	118	145	155
D	41	54	72	90	105	130	153	173
d	9,4	15,7	22,1	34,8	47,5	60,2	72,9	97,38
Weight (kg)	0,3	0,6	1,4	2,3	3,3	6,3	9,5	12,2

> Male GAS BSP 60° - B

Dimensions	1/2"	3/4"	1"	1-1/2"	2"	2-1/2"	3"	4"
L	61	70	77	88	98	118	145	155
D	41	54	72	90	105	130	153	173
d	12	18	22	28	34	40	52	70
Weight (kg)	0,3	0,6	1,4	2,3	3,3	6,3	9,5	12,2

> Female DIN ENDS - F

Dimensions	1/2"	3/4"	1"	1-1/2"	2"	2-1/2"	3"	4"
L	61	70	77	88	98	118	145	155
D	41	54	72	90	105	130	153	173
d	21,0	26,4	33,3	47,8	59,6	75,2	87,9	113,0
Weight (kg)	0,3	0,6	1,4	2,3	3,3	6,3	9,5	12,2

We reserve the right to change specifications at any time without prior notice

EDF is also available in the following standards

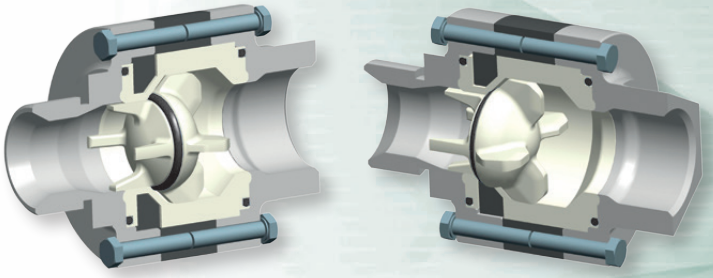

Full PTFE Version

For handling corrosive
and high purity fluids

Self draining ECCENTRIC flanged

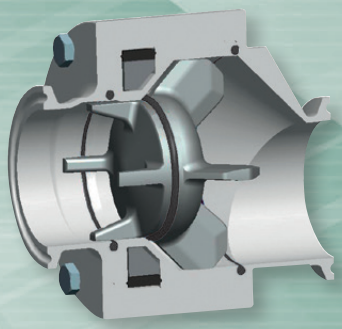

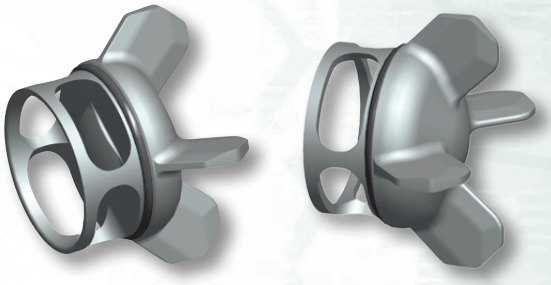

RING shutter version

For operating at very
high cycle rates

WAFER type

The springless Wafer check valve
for water treatment, vacuum
and gas applications

GROS VALVES

Carollo® GRUPPI MECCANICI MACCHINE ALIMENTARI

Flexachem.com PUMPS - SEALS - VALVES - PROCESS EQUIPMENT

www.Printaly.it | industria grafica