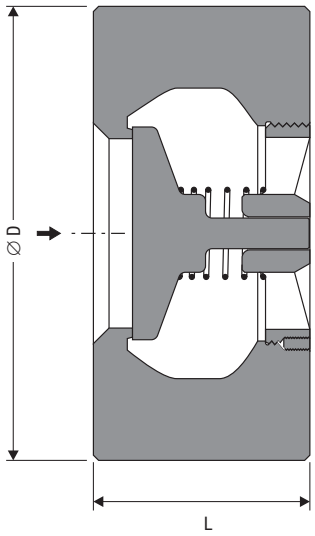

RK 29 A, DN 15-40 mm
PN 63/100/160/250/320/400
ASME class 400/600/900/1500/2500

RK 29A, DN 50-200 mm
PN 250/320/400
ASME Class 1500/2500

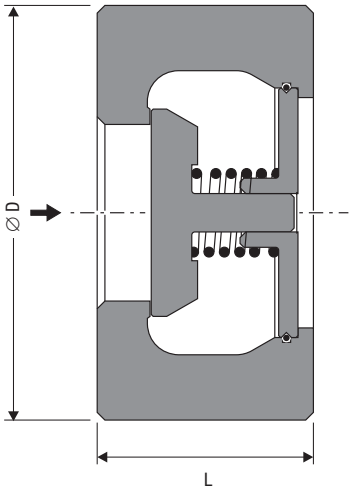

RK 29A, DN 50-200 mm
PN 63/100/160
ASME Class 400/600/900

Application

Type	PN	
RK 29 A	63 – 400 Cl 400 – 2500	For large pressure ratings and special tasks.

Materials

Type		Nominal sizes DN	EN reference	ASTM equivalent [1])
RK 29A	**Body**	15 – 200 mm	1.4571	AISI 316 Ti
	Plug		1.4571	AISI 316 Ti

[1]) ASTM material similar to EN material.
Observe different physical and chemical properties!

Dimensions RK 29A

	PN 63		PN 100		PN 160		class 400		class 600		class 900	
DN	L	D	L	D	L	D	L	D	L	D	L	D
15	35	63	35	63	35	63	35	54	35	54	35	63
25	40	84	40	84	40	84	40	73	40	73	40	79
40	56	105	56	105	56	105	56	95	56	95	56	98
50	56	115	56	121	56	121	56	111	56	111	56	142.5
80	71	149	71	156	71	156	71	149	71	149	71	168
100	80	176	80	183	80	183	80	176	80	193.5	80	205
150	125	250	125	260	125	260	125	247.5	125	266.5	125	288.5
200	160	312	160	327	160	327	160	304.5	160	320.5	160	358.5

PN 250 – 400 see data sheet. Cl 1500 and 2500 see data sheet.

Pressure/Temp. Ratings acc. EN 1092-1, material group 15E0

Type RK 29A	Max. service pressure [bar] at temperature [°C]		
Pressure rating	– 200	200	500
PN 63	63	53.8	44.2
PN 100	100	85.3	70.2
PN 160	160	136.5	112.4

Pressure/Temp. Ratings acc. ASME B 16.5, material group 2.4

Type RK 29A	Max. service pressure [bar] at temperature [°C]		
Pressure rating	– 218	200	500
class 400	66.2	51.1	37.6
class 600	99.3	76.6	56.6
class 900	148.9	114.9	84.7

Tightness of seat in accordance with DIN 3230, part 3, leakage rate BN 2, BO 3.

Sealing surfaces machined according to EN 1092-1, form B2, ASME B 16.5 RF smooth finish (63-125 µin).

Other designs available on request.

Designs

Type	Seat				Springs			Earthing connection
	metal-to-metal	EPDM (–40 up to 150 °C)[1])	FPM (–25 up to 200 °C)[1])	PTFE (–190 up to 250 °C)[1])	without spring	special spring	Nimonic spring [2])	
RK 29A	X	–	–	–	O	–	X	O

[1]) Observe pressure/temp. ratings of the equipment
[2]) Required for temperatures above 300 °C.

X : standard
O : optional
– : not available

Pressure Drop Charts

The curves given in the chart are valid for water at 20 °C. To read the pressure drop for other fluids the equivalent water volume flowrate must be calculated and used in the graph.

The values indicated in the chart are applicable to spring-loaded valves with horizontal flow. With vertical flow insignificant deviations occur only within the range of partial opening.

$$\dot{V}_W = \dot{V} \cdot \sqrt{\frac{\rho}{1000}}$$

$\dot{V}_W$ = Equivalent water volume flow in [l/s] or [m³/h]

ρ = Density of fluid (operating condition) in [kg/m³]

$\dot{V}$ = Volume of fluid (operating condition) in [l/s] or [m³/h]

Opening Pressures

Differential pressures at zero volume flow.

RK 29 A

DN	Opening pressures [mbar]						
	Direction of flow						
	without spring ↑		with spring ↑		with spring →		with spring ↓
	– PN 160 – Cl 900	– PN 400 – Cl 2500	– PN 160 – Cl 900	– PN 400 – Cl 2500	– PN 160 – Cl 900	– PN 400 – Cl 2500	– PN 400 – Cl 2500
15	6	6	22	22	16	16	10
25	8	8	26	26	18	18	10
40	10	10	30	30	20	20	10
50	10	10	30	30	20	20	10
80	11	13	32	36	21	23	10
100	12	24	34	58	22	34	10
150	18	–	46	–	28	–	10[1])
200	21	–	52	–	31	–	10[1])

[1]) only for PN 63-400
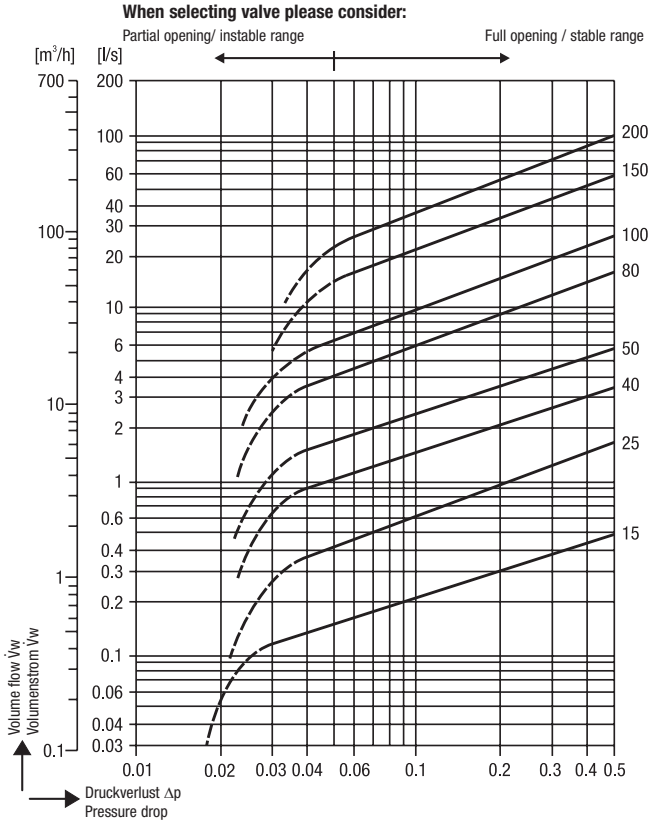
RK 29A