PBM Valve Solutions

Igenix® Cast Series 9 or Forged Series 8

2-Way Sanitary and Clean Steam Valves

U.S. Dimensioned valves in inches													
Valve Size	Size Code	I.D. Port	A1	A2	B1	B2	C	D	E	F	G	H	Approx. Wgt (lbs)
1/2"**	C	0.37	3.50	5.50	1.75	2.75	1.70	0.75	2.03	4.00	1.50	1.50	1.1
3/4"**	D	0.62	4.00	6.00	2.00	3.00	1.86	0.85	2.19	4.00	1.68	1.50	1.4
1"**	E	0.87	4.50	6.50	2.25	3.25	2.40	1.09	2.97	4.15	2.18	1.50	2.7
1-1/2"**	G	1.37	5.50	7.50	2.75	3.75	3.89	1.68	4.91	8.81	3.31	1.50	8.9
2"**	H	1.87	6.25	8.00	3.12	4.00	4.67	2.15	4.41	8.06	4.30	1.75	15.0
2-1/2"*	J	2.37	8.00	11.50	4.00	5.75	6.51	2.79	6.46	12.06	5.58	2.31	36.0
3"**	K	2.87	8.00	10.50	4.00	5.25	6.76	2.78	6.71	12.06	5.58	1.75	33.0
4"**	L	3.84	10.00	13.00	5.00	6.50	7.53	3.66	7.48	12.06	7.33	2.00	67.0
6"*	M	5.78	13.00	17.00	6.50	8.50	12.14	6.18	CF	CF	12.37	2.50	164.0

*Cast Only
**Wrought Material or Cast

Forged valves are < 1% ferrite.
Cast valves are < 2% ferrite.

ISO 1127 Dimensioned valves in mm													
Valve Size	Size Code	I.D. Port	Tube O.D.	Tube wall	Tube Series	A2	B2	C	D	E	F	G	H	Approx. Wgt. (kg.)
DN 8	1	10.3	13.5	1.6	1	140	70	44	19	52	103	38	38	0.5
DN 10	2	14.0	17.2	1.6	1	150	75	48	22	56	103	38	38	0.6
DN 15	3	18.1	21.3	1.6	1	165	83	62	28	76	131	55	38	1.2
DN 20	4	23.7	26.9	1.6	1	190	95	100	43	126	226	84	38	4.0
DN 25	5	29.7	33.7	2.0	1	190	95	100	43	126	226	84	38	4.0
DN 32	6	38.4	42.4	2.0	1	190	95	100	43	126	226	84	38	4.0
DN 40	7	44.3	48.3	2.0	1	200	100	120	55	113	208	109	42	6.8

DIN 11850 Dimensioned valves in mm														
Valve Size	Size Code	I.D. Port	Tube O.D.	Tube wall	Tube Series	A2	B2	C	D	E	F	G	H	Approx. Wgt (kg.)
DN 8	1	8	10	1.0	1	140	70	52	19	52	102	38	38	0.5
DN 10	2	10	13	1.5	2	140	70	52	19	52	102	42	38	0.5
DN 15	3	16	19	1.5	2	152	76	56	22	76	105	42	38	1.2
DN 20	4	20	23	1.5	2	165	83	76	28	76	105	55	38	1.2
DN 25	5	26	29	1.5	2	190	95	100	43	125	224	84	38	4.0
DN 32	6	32	35	1.5	2	190	95	100	43	125	224	84	38	4.0
DN 40	7	38	41	1.5	2	190	95	100	43	125	224	84	38	4.0
DN 50	8	50	53	1.5	2	200	100	120	55	119	205	109	42	6.8

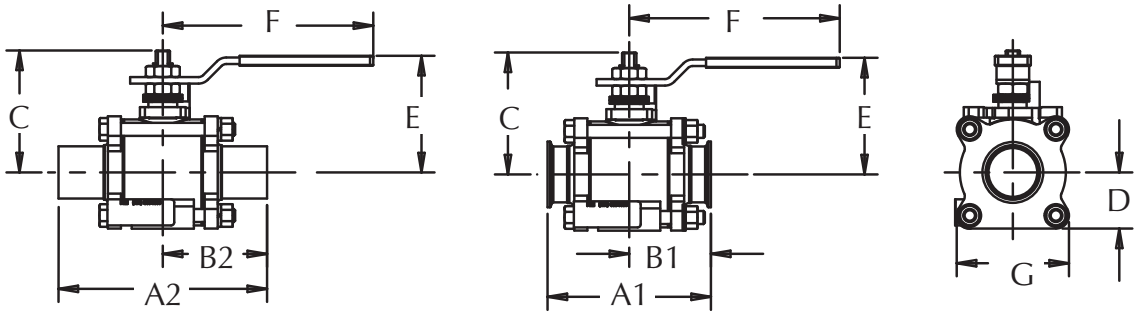

Igenix® Cast Series 9 or Forged Series 8 Extended Locking Lever Handle

Extended Locking Lever Handle

Valve Size			A		B - 2″		C		B - 4″		E	
US	DN ID	ISO	inches	mm	inches	mm	inches	mm	inches	mm	inches	mm
1/2″	8, 10	8	5.09	129	4.00	102	2.50	64	6.00	152	0.31	8
3/4″	-	10	5.09	129	4.14	105	2.50	64	6.14	156	0.31	8
1″	15,20	15	5.09	129	5.44	138	3.50	89	7.44	189	0.31	8
1-1/2″	25,32,40	20,25,32	8.00	203	7.46	189	3.75	95	9.46	240	0.38	10
2″	50	40	8.00	203	7.74	197	4.30	109	9.74	247	0.38	10
2-1/2″	-	-	12.10	307	9.36	238	5.58	142	11.36	289	0.38	10
3″	-	-	12.40	315	9.61	244	5.58	142	11.61	295	0.38	10
4″	-	-	12.40	315	10.38	264	7.33	186	12.38	314	0.38	10

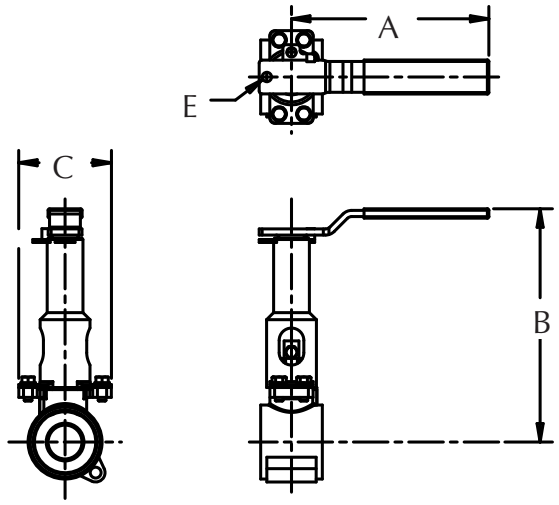

Note: 2″ extension standard on 1/2″ - 2″. 4″ extension standard on 2-1/2″ - 4″.

Manual Valves with Tubing Ends (inches)				
Valve Size	Tube OD	Insulation max with no extension	Insulation max with 2″ extension	Insulation max with 4″ extension
1/2″	0.500	0.76	2.68	4.68
3/4″	0.750	0.79	2.72	4.72
1″	1.000	1.45	3.88	5.88
1-1/2″	1.500	3.10	5.57	7.57
2″	2.000	2.31	5.60	7.60
2-1/2″	2.500	4.00	6.88	8.88
3″	3.000	4.08	6.88	8.88
4″	4.000	4.35	7.12	9.12

Maximum insulation dimensions shown allow for 3/4″ of clearance between outside of insulation and bottom of handle.

Locking Handle

Valve Size			A		B		C	
US	DIN	ISO	inches	mm	inches	mm	inches	mm
1/2″	8, 10	8	4.00	102	2.03	52	1.55	39
3/4″	-	10	4.00	102	2.19	56	1.55	39
1″	15,20	15	5.10	130	2.97	75	1.64	42
1-1/2″	25,32,40	20,25,32	8.80	224	4.91	125	2.57	65
2″	50	40	8.10	206	4.41	112	2.57	65
2-1/2″	-	-	12.40	315	6.46	164	3.84	98
3″	-	-	12.40	315	6.75	171	3.84	98
4″	-	-	12.40	315	7.75	197	3.84	98

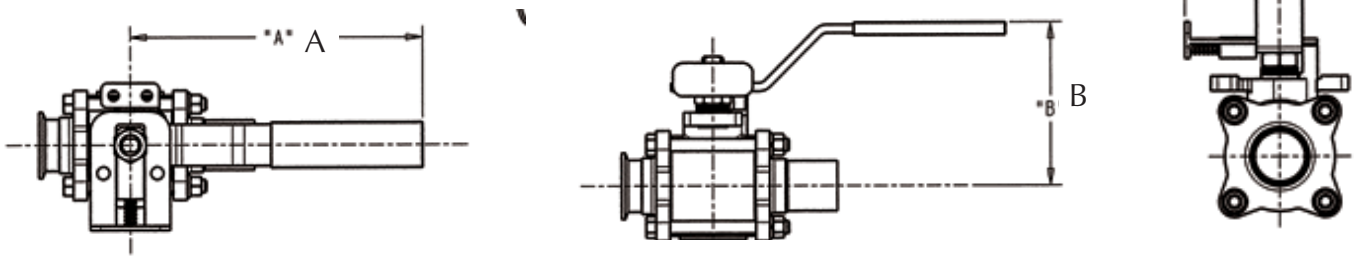

Materials

316L Stainless Steel

Castings comply with A351, Alloy CF3M.
Forgings (Series 8) comply with A182, Alloy F316L and 1.4404.
Bar product complies with A479, Alloy S31603.
Cast weld pads comply with SA 351, Alloy CF3M and wrought weld pads comply with SA 479, Alloy S31603.

- Has a low (<0.03%) carbon level to reduce carbide precipitation.
- Is extremely corrosion resistant to acidic and basic environments and does not pit easily.
- Can be mechanically polished to a near-mirror finish for easy cleanability (electro polishing also available).
- Is preferred for sanitary and biotechnological uses.
- Extended butt weld ends have a sulfur content of 0.005 to 0.017% to support orbital welding.
- Low ferrite cast product is available for all product lines. Standard ferrite level of Series 8 forgings is less than 1% and standard ferrite level of Series 9 castings is less than 2%.

Other

- Additional materials available include AL6XN®, duplex stainless, Hastelloy® alloys, Alloy 20, titanium alloys, and Inconel® alloys.

Seat and Seal Materials

Designation	Description	Color	Purpose
TFM™	Chemically Modified PTFE PBM Standard for Series 6, 7, 8, 9	White	Suitable for applications up to 400˚F. This chemically modified PTFE material is PBM's standard seat and seal material. It combines the ruggedness of a filled PTFE with the low coefficient of friction of virgin PTFE. TFM™ also has much improved porosity control and deformation under load when compared to PTFE grades. FDA and USP Class VI compliant. Meets bubbletight seat leakage.
VTFE	Virgin PTFE	White	Suitable for applications up to 350˚F. A low stem torque material ideal for sanitary use. FDA and USP Class VI compliant. Meets bubbletight seat leakage.
S-TEF®	Stainless Steel Reinforced PTFE	Charcoal Gray	Suitable for applications up to 450˚F. A suitable material for higher pressure/ temperature applcations. Higher stem torque than virgin grades and TFM™. USP Class VI compliant. Meets bubble- tight seat leakage.
UHMWPE	Ultra High Molecular Weight Polyethylene	Off White	Suitable for applications under 200˚F. An extremely wear resistant material having a wear rate about 1/10th that of PTFE. FDA compliant and is used in high cycle applications where possible. Meets bubbletight seat leakage.
PEEK®	Poly Ether Ether Ketone	Putty	For applications up to 500˚F. PEEK® is a rugged, high strength material having fairly high stem torque. FDA compliant. PBM's PEEK® is 10 weight percent PTFE to reduce the hardness of virgin PEEK®. FDA compliant and meets Class V seat leakage.
KYNAR®	Polyvinylidene Fluoride	Slightly Transparent White	Suitable for applications under 250˚F. Kynar® has been used successfully in abrasive service and is suitable for radiation environments where gamma levels accumulate to 1,000 megarads. FDA and USP Class VI compliant. Meets bubbletight seat leakage.

NOTES:
1. PTFE is Polytetrafluorethylene.
2. Seat and seal materials may be mixed in a valve in order to provide media-compatibility and the appropriate torque, temperature and pressure ratings.
3. Temperature ratings based on 0 psi. See Pressure & Temperature Charts on page 8.

Allowable Working Pressures (psig, barg)

Non-Flanged Valve Style/Series	Material	Size	-20˚F to 100˚F/ -28.9˚C to 37.8˚C		300˚F/148.9˚C		450˚F/232.2˚C	
		Inches/DIN	psig	barg	psig	barg	psig	barg
SI, FI Series 6	316 SS/316L	3″ (DN80) and under	720	49.6	620	42.7	540	37.2
SI, CS, DI, DC Series 8	316 SS/316L	All	600	41.4	455	31.4	397	27.4
	C-276	All	740	51.0	655	45.2	620	42.7
SI, CS, DI, DC Series 9	316 SS/316L	1-1/2″ (DN40) and smaller	900	62.1	770	53.1	680	46.9
		2″ (DN50) thru 4″ (DN100)	720	49.6	620	42.7	540	37.2
		6″ (DN150)	375	25.9	320	22.1	280	19.3
	C-276	4″ (DN100) and smaller	600	4.14	510	35.2	450	31.0
		6″ (DN150)	375	25.9	320	22.1	280	19.3
MI Series 5	316 SS/316L	All	275	19.0	205	14.1	195	13.4
AF Series 1	316 SS/316L	1-1/2″ (DN40) and smaller	900	62.1	770	53.1	680	46.9
	316 SS/316L	2″ (DN50), 4″ (DN100)	550	37.9	540	37.2	525	36.2
	316 SS/316L	3″ (DN80)	625	43.1	610	42.1	600	41.4
	316 SS/316L	6″ (DN150)	375	25.9	365	25.2	360	24.8
	C-276	1-1/2″ (DN40) and smaller	600	41.4	520	35.9	475	32.8
	C-276	2″ (DN50), 4″ (DN100)	550	37.9	540	37.2	525	36.2
	C-276	3″ (DN80)	600	41.4	520	35.9	475	32.8
	C-276	6″ (DN150)	375	25.9	320	22.1	280	19.3
AF Series 3	316 SS/316L	1-1/2″ (DN40) and smaller	720	49.6	620	42.7	540	37.2
	316 SS/316L	2″ (DN50), 4″ (DN100)	550	37.9	540	37.2	525	36.2
	316 SS/316L	3″ (DN80)	625	43.1	610	42.1	600	41.4
	316 SS/316L	6″ (DN150)	375	25.9	365	25.2	360	24.8
FI, FC Series 8 & 9	316 SS/316L	4″ (DN100) and smaller	600	4.14	510	35.2	440	30.3
	316 SS/316L	6″ (DN150)	375	25.9	320	22.1	280	19.3
	C-276	4″ (DN100) and smaller	600	4.14	510	35.2	440	30.3
	C-276	6″ (DN150)	375	25.9	320	22.1	280	19.3

Notes:
1. 316 SS and C-276 retain their CWP below minus 20˚F.
2. All valves rated for full vacuum.
3. Sanitary clamps and gaskets may limit pressure ratings to less than shown above.

Seat & Seal Temperature and Pressure Charts

Valves 1-1/2-Inch and Smaller

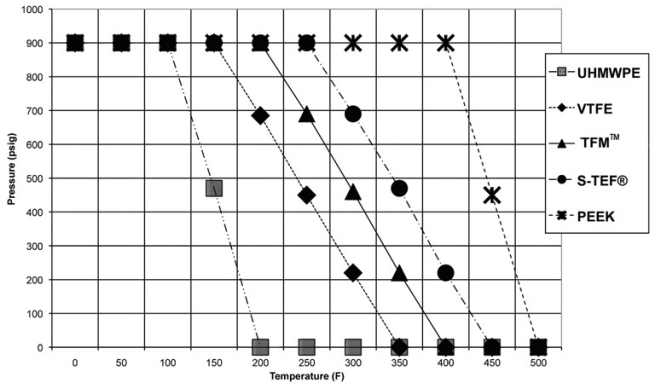

2-Inch to 3-Inch

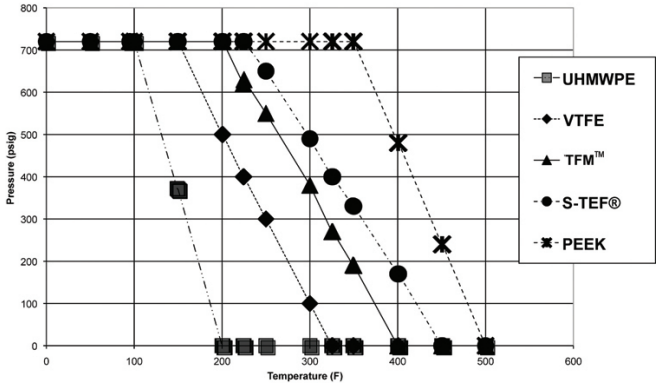

4 and 6-Inch

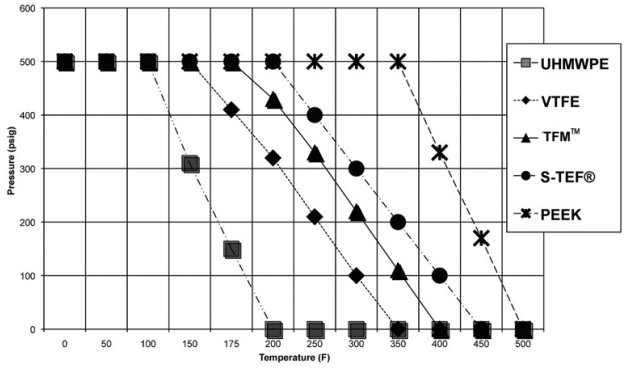

Cv Values (gpm)

Cv is defined as the number in U.S. gallons of water per minute, at ambient temperature, that will flow through a valve at 1 psi pressure drop.

VALVE SIZE	2-WAY SI, CS				FLUSH TANK FI SERIES 8 & 9 AF SERIES 1			DIVERTER PORT SERIES 8 & 9			MULTI-PORT SERIES 5			CT Valves
	SERIES 8 & 9		FIRESAFE SI		AF	FI	FIRESAFE FI	DI SERIES, X-ENDS			MI SERIES 5, X-ENDS			Trap Position
	End Connection				End Connection			L-PORT	T-PORT		T-PORT		L-PORT	Series
	F-	X-	F-	X-	X-	X-	X-		Straight	Branch	Straight	Branch		8 & 9
1/2″	6.5	8	7	8		8.9	8.9	4.0	4.7	3.0	3.8	2.5	3.8	0.41
3/4″	23	28	24	28		34	34	12	15	9.0	12	7	12	0.72
1″	55	65	55	60	63	62	62	25	29	18	25	15	25	0.96
1 1/2″	160	193	160	190	150	175	175	68	81	49	66	40	66	2.8
2″	365	420	370	420	280	480	480	133	160	92	129	78	129	2.7
2 1/2″	700	800	700	800										
3″	900	1.040	850	1000	505	870	870	324	390	233	310	185	310	5.4
4″	1,800	2,080	1600	1900	690	1,550	1,550	590	715	430	570	340	570	15
6″	4,200	5,000	4200	5000	1,430	3,750	3,750	1,450	1,750	1,040				

* F- (extended buttweld) end
* X- (Sanitary) end

ID Surface Finish. Ra Readings for Valves per ASME BPE (Bioprocessing Equipment)

PBM's IGENIX® forged valves have a standard internal polish of 20 R_a Max/0.50 µm or better.

Surface Description	PBM Polish Code	Ra max.	
		µ-in.	µm
		Mechanical Polish	
SF 1	A	20	0.51
SF 2	A	25	0.64
SF 3	-	30	0.76
		Mechanical polish and electropolish	
SF 4	G	15	0.38
SF 5	F	20	0.51
SF 6	F	25	0.64

Default Polish:
Series 8 - 20 Ra (SF-1)
Series 9 - 30 Ra (SF-3)

Polish Notes:
- On ID polished valves, the body, ball, seat retainer (if applicable) and end fittings are polished.
- On ID/OD polished valves, the body, ball, seat retainer (if applicable and end fittings are polished.
- On ID+EP polished valves, the body, ball, seat retainer (if applicable), end fittings are polished. Stem is EP'd.
- PBM achieves surface finishes without the use of ADIs (Animal Derived Ingredients).

O-Ring and Seat Compliancy

Material		Compliancy	
		FDA	USP Class VI
EPR O-ring*	E3609-70	Yes	Yes
Seat	Virgin TFM™	Yes	Yes

*O-rings used in "Clean Steam" Series CS, CT, FC, DC and SI, FI, AF Firesafe.

Stem Torque

Valve Style/ Series	Valve Size (in.)	As built Torque		TFM™ and VTFE Seats - Differential Pressure across Seats															
				0 psig	0 barg	100 psig	6.9 barg	200 psig	13.8 barg	300 psig	20.7 barg	400 psig	27.6 barg	500 psig	34.5 barg	600 psig	41.4 barg	700 psig	48.3 barg
		in.-lb.	N-m	in.-lb.	N-m	in.-lb.	N-m	in.-lb.	N-m	in.-lb.	N-m	in.-lb.	N-m	in.-lb.	N-m	in.-lb.	N-m	in.-lb.	N-m
Fire-safe Series 6	1/4, 1/2	32	3.6	64	7.2	64	7.2	64	7.2	64	7.2	64	7.2	64	7.2	64	7.2	64	7.2
	3/4	40	4.5	80	9.0	80	9.0	80	9.0	80	9.0	80	9.0	96	10.8	112	10.8	128	12.7
	1	58	6.6	116	13.1	116	13.1	116	13.1	150	16.9	185	20.9	220	24.9	trun.			
	1-1/2	154	17.4	308	34.8	308	34.8	440	49.7	580	65.5	715	80.8	trun.	trun.				
	2	182	20.6	364	41.1	364	41.1	635	71.7	910	102.8	1,180	133.3	trun.	trun.				
	2-1/2	288	32.5	576	65.1	576	65.1	1,200	135.6	1,600	180.8	trun.							
	3	430	48.6	860	97.2	860	97.2	1,560	176.3	trun.	trun.								
	4	787	88.9	1,570	177.4	2,650	299.4	trun.	trun.										
	6	1,920	217.0	3,840	433.9	7,100	802.3	Use trunnion above 75 psig.											
All Series 8 & 9 2-Way and 3-Way	1/2	25	2.8	50	5.7	50	5.7	50	5.7	50	5.7	50	5.7	50	5.7	50	5.7	50	5.7
	3/4	30	3.4	60	6.8	60	6.8	60	6.8	60	6.8	60	6.8	60	6.8	60	6.8	80	9.0
	1	50	5.7	100	11.3	100	11.3	100	11.3	130	14.7	160	18.1	220	24.9	trun.	trun.		
	1-1/2	132	14.9	264	29.8	264	29.8	375	42.4	500	56.5	600	67.8	trun.	trun.				
	2	182	20.6	364	41.10	364	41.1	635	71.8	910	102.8	1,180	133.3	trun.	trun.				
	2-1/2	288	32.5	576	65.1	576	65.1	1,200	136	1,600	181	trun	trun.						
	3	430	49	860	97.2	860	97.2	1,560	176	trun.	trun.								
	4	672	76	1,340	151	2,250	254	trun.	trun.										
	6	1,920	217	3,840	434	7,100	802	Use trunnion above 75 psig.											
AF Series 1 and Series 3	1	58	6.6	116	13.1	116	13.1	116	13.1	150	17.0	185	20.9	220	24.9	255	28.8	288	32.5
	1-1/2	132	14.9	264	29.8	264	29.8	375	42.4	500	56.5	600	67.8	725	81.9	850	96.1	950	107
	2	154	17.4	308	34.8	308	34.8	440	49.7	580	65.5	715	80.8	850	96.1				
	3	336	38.0	675	76.3	675	76.3	1,400	158	1,900	215	2,400	271	2,900	328	3,400	384		
	4	432	49	860	97.2	860	97.2	1,560	176	2,050	232	2,540	287	3,030	342				
	6	1,056	119	2,100	237	3,950	446												

Valve Series	Size	As built Torque		0 psig	0 barg	100 psig	6.9 barg	200 psig	13.8 barg	275 psig	19.0 barg
MI Series 5	1/2	67	7.6	135	9.3	142	9.8	149	10.3	154	10.6
	3/4	80	9.0	160	11.0	167	11.5	174	12.0	182	12.5
	1	154	17.4	307	21.2	322	22.2	337	23.2	358	24.7
	1-1/2	313	35.4	627	43.2	670	46.2	759	52.3	843	58.1
	2	491	55.5	981	67.6	1,037	71.5	1,238	85.4	1,388	95.7
	3	840	95.0	1,679	115.8	2,084	143.7	2,761	190.4	3,268	225.3
	4	1539	173.9	3,077	212.2	4,114	283.7	5,580	384.7	6,679	460.5

Notes:

1. For valves with UHMWPE seats, multiply the above values by 1.25
2. For valves which have S-TEF® or Kynar® seats, multiply the above values by 1.56.
3. For valves with PEEK® seats, multiply the above values by 1.7.
4. Where trunnion is indicated, PBM recommends trunnion mounting the ball to avoid excessive seat loads and stem torques.
5. To convert in-lbs. torques to N-m, multiply by 0.113.

Torque Ratings for PBM Actuators

All published torque values are guaranteed minimum values.

Spring Return Actuators

Actuator Model	Spring Set	Spring Torque Output (in-lbs)		Air Pressure at Actuator (psig)			
				60		80	
				Torque Output from Pressure (in-lbs)			
		Start	End	Start	End	Start	End
PAVCL253S - -0052	03	66	46	80	47	N/A	N/A
PAVCL453S - -0052	05	105	72	N/A	N/A	101	55
PAVCL253S - -0063	03	128	71	149	79	N/A	N/A
PAVCL453S - -0063	05	196	111	N/A	N/A	193	95
PAVCL253S - -0075	03	249	133	275	137	N/A	N/A
PAVCL453S - -0075	05	380	205	N/A	N/A	354	157
PAVCL253S - -0085	03	361	215	387	211	N/A	N/A
PAVCL453S - -0085	05	536	321	N/A	N/A	503	257
PAVCL253S - -0100	03	564	318	628	329	N/A	N/A
PAVCL453S - -0100	05	860	489	N/A	N/A	802	378
PAVCL253S - -0115	03	957	535	1,044	541	N/A	N/A
PAVCL453S - -0115	05	1,432	800	N/A	N/A	1,352	637
PAVCL253S - -0125	03	1,313	718	1,351	640	N/A	N/A
PAVCL453S - -0125	05	1,913	1,055	N/A	N/A	1,762	789
PAVCL253S - -0140	03	1,958	1,036	1,910	856	N/A	N/A
PAVCL453S - -0140	05	2,728	1,453	N/A	N/A	2,481	1,017
PAVCL253S - -0160	04	2,841	1,770	2,447	1,350	N/A	N/A
PAVCL453S - -0160	05	3,327	2,230	N/A	N/A	3,452	2,240
PAVCL253S - -0200	04	4,699	3,124	4,788	3,080	N/A	N/A
PAVCL453S - -0200	06	6,867	4,664	N/A	N/A	5,893	3,539
PAVCL253S - -0270	05	12,549	8,044	11,495	6,884	N/A	N/A
PAVCL453S - -0270	08	16,735	10,735	N/A	N/A	15,360	9,220

Weights and Volumes

Actuator Model	Rotate CCW	Rotate CW	PAVC series
	Volume (cu.in.)	Volume (cu.in.)	Approx. wgt (lbs)
PAVCL453D - - 0052	6.1	7.9	3.0
PAVCL453S - - 0052	6.1	6.7	3.5
PAVCL453D - - 0063	12	14	4.4
PAVCL453S - - 0063	12	11.6	5.3
PAVCL453D - - 0075	22	27	7.7
PAVCL453S - - 0075	22	22	9.1
PAVCL453D - - 0085	31	39	10.4
PAVCL453S - - 0085	31	32	12.9
PAVCL453D - - 0100	48	61	14.7
PAVCL453S - - 0100	48	49	18.8
PAVCL453D - - 0115	79	104	23.7
PAVCL453S - - 0115	79	84	30.7
PAVCL453D - - 0125	99	135	28.9
PAVCL453S - - 0125	99	109	37.7
PAVCL453D - - 0140	138	193	43.7
PAVCL453S - - 0140	138	146	57.6
PAVCL453D - - 0160	220	290	58.3
PAVCL453S - - 0160	220	215	79.0
PAVCL453D - - 0200	350	600	99.1
PAVCL453S - - 0200	348	463	147
PAVCL453D - - 0270	915	1,086	222
PAVCL453S - - 0270	915	946	269

Double Acting Actuators

Actuator Model	Air pressure at actuator (psig)	
	60 psig	80 psig
	Constant Torque Output (in-lbs)	
PAVCL453D - - 0052	133	179
PAVCL453D - - 0063	238	321
PAVCL453D - - 0075	435	586
PAVCL453D - - 0085	629	851
PAVCL453D - - 0100	991	1,336
PAVCL453D - - 0115	1,640	2,210
PAVCL453D - - 0125	2,157	2,906
PAVCL453D - - 0140	3,013	4,018
PAVCL453D - - 0160	4,394	5,859
PAVCL453D - - 0200	8,239	10,981
PAVCL453D - - 0270	19,097	25,469

Positioners

- Gauges/No gauges
- 4-20 mA (Electro-pneumatic)
- 3-15 psi (pneumatic)
- Weatherproof, explosion proof
- Proximity, Mechanical Switches
- Solid State Sensors
- Flat or Domed Indicator

Electric Actuators

- Weatherproof, explosion proof
- Modulating or On/Off
- 2, 3, or 4 position
- Battery back-up
- Communication Bus interfaces available
- Auxiliary Limit Switches
- Motor Brake
- Handwheel override
- Potentiometers
- AC or DC

Solenoids

Features:

- Compact spool valve with threaded port, direct mounts to actuator
- All exhaust ports are pipeable, providing better protection against harsh environments.
- Standard manual override.
- DIN, weatherproof and explosion-proof solenoids available.
- Single and dual-coil solenoid constructions.
- Mountable in any position.

Position Indicators

Options:

- Weatherproof, Explosion proof
- Mechanical or Proximity Switches
- Fieldbus
- DeviceNet
- Visual Indication
- AS-i
- ATEX, IEC, CSA, NEMA, etc.